Wood Fire Flue Kit - Freestanding

Product Description	Part Number
Flue Kit (Hi Therm) - Black - 150mm dia	**SFP1002**

ROOF TERMINATION KIT PART 2

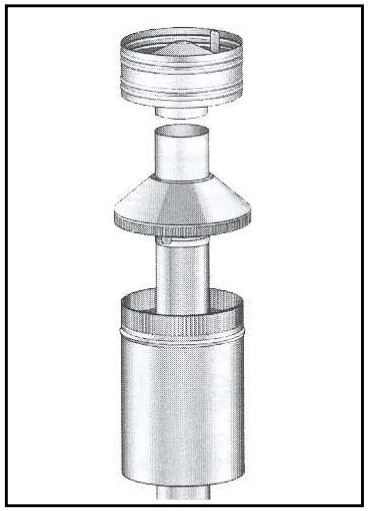

(to suit: LE 2000, Siena, LE 3000, Verona, Utopia)

Part 2 Contains:

1 x 600mm Outer Slip
1 x 400mm Flue Pipe
1 x Top Spider
1 x Casing Cover
1 x Anti Down Draught Cowl

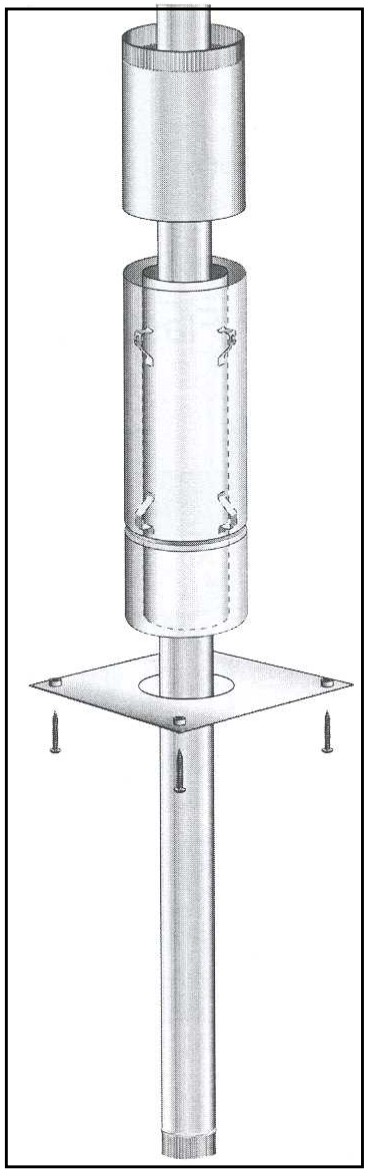

STARTER KIT PART 1

Part 1 Contains:

3 x 1200mm Stainless Steel Flue
1 x 1200mm Inner / Outer Sheild Combination
1 x Ceiling Plate
1 x Pack of Screws and Spacer
1 x 600mm Outer Sheild

Note: Flue Reflector is required for standard installations

4 metre kits meet the Flue Pipe requirements of AS/NZS 2918:2001 (4.6m rule) for a standard 2.4m stud height and a wood fire height of 600mm or greater

LE 2000

Siena

LE 3000

Utopia

Verona

150mm Freestanding Wood Fire Flue Kit Installation Instructions

This flue kit has been manufactured in accordance with AS / NZS 2918:2001. To ensure safety this flue kit must be installed as outlined in these instructions. Heater and flue clearances from combustible walls must be in accordance with Masport's specifications and AS / NZS 2918:2001. **Minimum height 4.6m above floor protector.**

1) Locate heater in its proposed position and mark a point on the ceiling that is directly above the centre of the heater's flue outlet. Check that the heater's location allows the OUTER HEAT SHIELD to clear all structural roof timbers.

2) Cut a 250mm square hole in ceiling. Directly above cut a hole in roof to accommodate OUTER HEAT SHIELD.

3) Fit timber nogs around ceiling and roof holes. i.e. Nogs form a 250mm square aperture which allows air to circulate freely over the OUTER HEAT SHIELD surface.

4) Position the OUTER HEAT SHIELD so that it is flush with the underneath of the ceiling and protrudes through the roof the required height. When calculating roof penetration height allow for an extra 500mm that can be achieved by using the OUTER HEAT SHIELD SLIP EXTENSION.

   a) If the flue is within 3 metres of the ridge, the OUTER HEAT SHIELD must protrude at least 600mm above the ridge of the roof

   b) If the distance from the ridge is more than 3 metres, the OUTER HEAT SHIELD must protrude at least 900mm above roof penetration.

Additional OUTER HEAT SHIELD and INNER SHIELD (BAFFLE) may have to be added to ensure the correct roof penetration heights are obtained. Outer Liner and Inner Baffle must be installed crimp up. Inner sheild must penetrate through roof material a minimum of 200mm.

5) Fix an appropriate flashing around the OUTER HEAT SHIELD to seal onto the roofing material.

6) From the roof slide the INNER SHIELD into the OUTER HEAT SHIELD until it rests 12mm above ceiling level.

7) Assemble FLUE PIPES together ensuring seams are in line. Secure each joint with 3 rivets or self-tapping screws. FLUE PIPES must be assembled with crimped ends down (towards heater). **Flue must be sealed into Firebox using Maniseal.**

8) Place CEILING PLATE over heater flue spigot, ensuring the folded edge upstands are facing the ceiling.

9) From the roof lower FLUE PIPE through OUTER HEAT SHIELD into position.

10) Before securing the OUTER HEAT SHIELD SLIP EXTENSION to the OUTER HEAT SHIELD with 3 rivets or self tapping screws, ensure the FLUE PIPE extends above the top of the OUTER HEAT SHIELD SLIP EXTENSION 170mm.
    Adjust SLIP EXTENSION to obtain this measurement. If minimum roof penetration heights described earlier can not be achieved add sufficient stainless steel FLUE PIPE.

11) Fit CASING COVER over the FLUE PIPE and push down firmly onto TOP FLUE SPACER BRACKET. Secure with a rivet or self-tapping screw.

12) Fit COWL but do not secure, as removal for flue cleaning will be necessary.

13) Fasten CEILING PLATE to ceiling using screws and spacers provided. Ensure an even air gap around FLUE PIPE when fixing. Remove protective plastic from CEILING PLATE.

N.B. It is the responsibility of the installer to ensure that the installation of this flue kit complies with Masport's specifications for flues and that relevant Local Body requirements are adhered to.